Package Dimensions

Product	SiC MOSFET	Package	TO-247-3

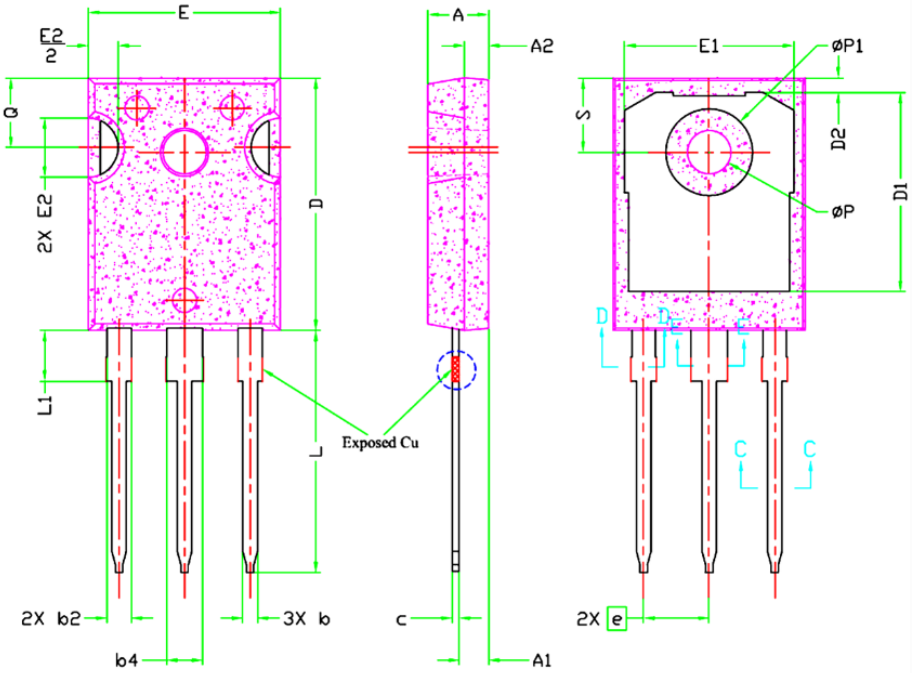

SYMBOL	DIMENSIONS			NOTES
	MIN.	NOM.	MAX.	
A	4.83	5.02	5.21	
A1	2.29	2.41	2.55	
A2	1.50	2.00	2.49	
b	1.12	1.20	1.33	
b1	1.12	1.20	1.28	
b2	1.91	2.00	2.39	6
b3	1.91	2.00	2.34	
b4	2.87	3.00	3.22	6, 8
b5	2.87	3.00	3.18	
c	0.55	0.60	0.69	6
c1	0.55	0.60	0.65	
D	20.80	20.95	21.10	4
D1	16.25	16.55	17.65	5
D2	0.51	1.19	1.35	
E	15.75	15.94	16.13	4
E1	13.46	14.02	14.16	5
E2	4.32	4.91	5.49	3
e	5.44BSC			
L	19.81	20.07	20.32	
L1	4.10	4.19	4.40	6
øP	3.56	3.61	3.65	7
øP1	7.19REF.			
Q	5.39	5.79	6.20	
S	6.04	6.17	6.30	

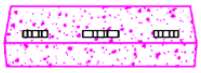

Note:
1. Package Reference: JEDEC TO247, Variation AD.
2. All Dimensions Are In mm.
3. Slot Required, Notch May Be Rounded
4. Dimension D & E Do Not Include Mold Flash. Mold Flash Shall Not Exceed 0.127mm Pre Side. These Dimensions Are Measured At The Outermost Extreme Of The Plastic Body.
5. Thermal Pad Contour Optional Within Dimension D1 & E1.
6. Lead Finish Uncontrolled In L1.
7. ØP To Have A Maximum Draft Angle Of 1.5° To The Top Of The Part With A Maximum Hole Diameter Of 3.91mm.
8. Dimension "b2" And "b4" Does Not Include Dambar Protrusion. Allowable Dambar Protrusion Shall Be 0.10mm Total In Excess Of "b2" And "b4" Dimension At Maximum Material Condition.

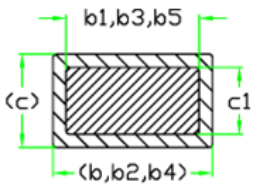

Section C–C,D–D,E–E
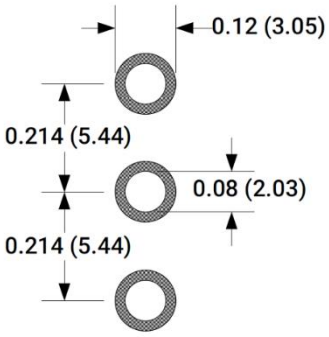
Recommended Solder Pad Layout